Power Distribution Module

ASI471078
ASIUGM5-FX2/24

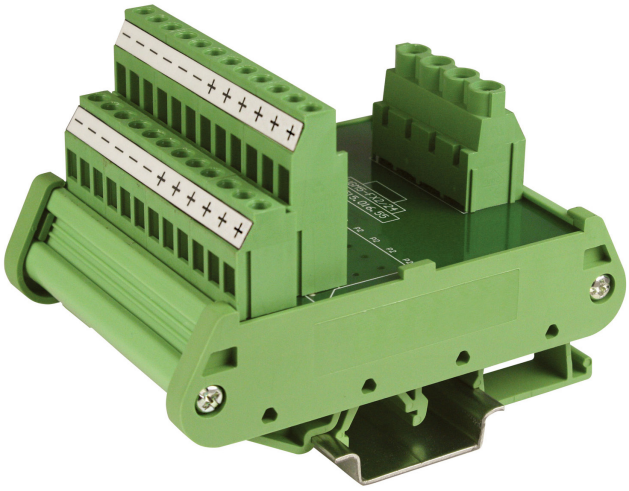

DIN rail mounted power distribution module is used to distribute the output of one or two parallel power supplies to up to 12 devices.

Order Number:	ASI471078
Product Type:	ASIUGM5-FX2/24
Specifications	
Voltage:	250 Vac/dc
Current Rating:	30 A Max
Operating Temperature:	-25 to 50° C
Pollution Degree:	2 (IEC60664-1)
Dimensions (HxWxD):	66 x 67 x 92 mm
Input Terminals	
Wire Size:	26-10 AWG sol/str
Stripping Length:	8 mm (.32")
Torque:	4.4 Lb In
Output Terminals	
Wire Size:	26-12 AWG sol/str
Stripping Length:	7 mm (.28")
Torque:	4.4 Lb In
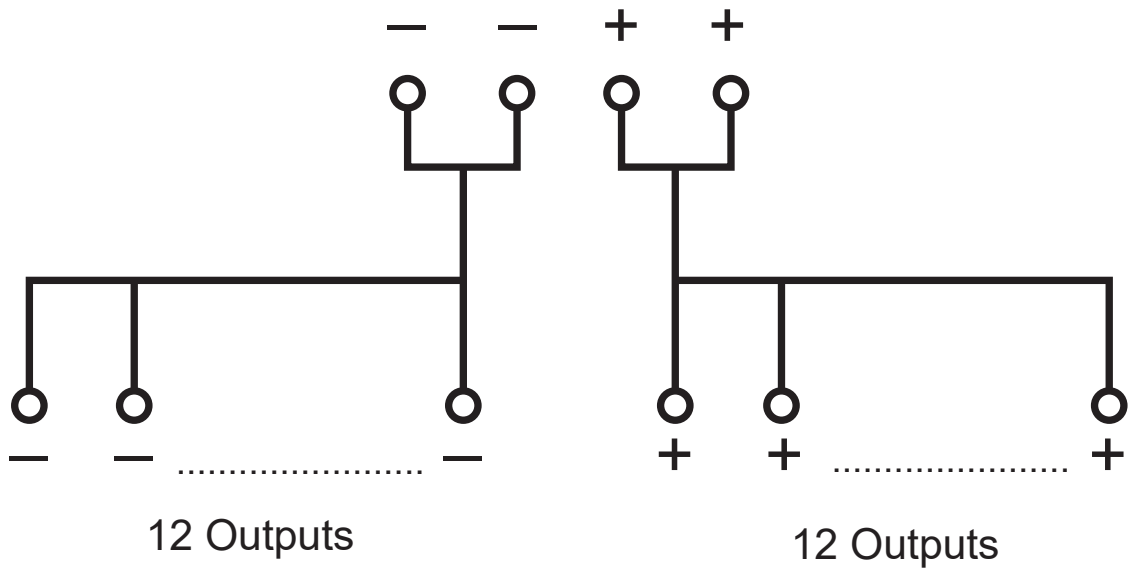
Circuit Schematic